FEATURES：

- Remote ON/OFF control
- Input over voltage & under voltage protection (self-recovery)
- Output over voltage protection (self-recovery)
- Output over current & short circuit protection (self-recovery)
- Over temperature protection (self-recovery)
- Input- to- output dielectric strength: 4250Vdc
- Operating baseplate temperature: -40 ℃ ~ +100 ℃
- MTBF ≥ 2 000 000 H (Telcordia standard, Tc=25 ℃, rated input, full load output, conductive heat dissipation)

Selection Guide

Part No.	INPUT		OUTPUT				Typical Max Full- load Efficiency (%)
	Norminal (Vdc)	Range (Vdc)	Voltage (V1dc)	current (A)	Output Voltage Adjustment Range (%)	Output Ripple & Noise (mVp-p)	
LD2000T-300S28	300	200-400	28	0~71.4			95
LD2000T-600S24	600	400-800	24	0~83.3	-20～+10	200	95
LD2000T-600S28			28	0~71.4			95
LD2000T-600S48			48	0~41.7			95

customized accepted,pls contact sales for details

Input Specifications

	Input Voltage Range（Vdc）	Nom(Vdc)	Max（Vdc）
Input Voltage Range	200-400	300	400
	400-800	600	800

Input Characteristics					
Operating input voltage range	400	600	800	Vdc	
Maximum input current			5.75	A	380 Vdc input, 2000 W output
No- load input current		35	45	mA	Output no- load
Standby input current		30		mA	Remote shutdown status
Input transient inrush current		20		A·2s	
Input reflected ripple current		500		mA	540 Vdc input, full- load output, Ta=25 ℃; see Figure 14 for test setup

ON/OFF remote control current		2		mA	Maximum sink- current limit for ON/OFF pin
Input Under- voltage Protection					Half load output, Ta=25 ℃
UVLO threshold	320	350	370	Vdc	
UVLO recovery threshold	325	355	375	Vdc	
UVLO hysteresis		10		Vdc	
Input Over- voltage Protection					Half load output, Ta=25 ℃
OVP threshold	885	905	925	Vdc	
OVP recovery threshold	880	900	920	Vdc	
OVP hysteresis		10		Vdc	
External input capacitor	330			μF	Low- ESR electrolytic capacitor (- 40 ℃), good wide- temperature performance, rated ≥1 kV; parallel with metal- film capacitor
External input capacitor	330			μF	Low- ESR electrolytic capacitor (- 40 ℃), good wide- temperature performance, rated ≥1 kV; parallel with metal- film capacitor
	5			μF	Metal- film capacitor, rated ≥1 kV
Output Characteristics					
Output voltage accuracy			±1.0	%Vo	380～850 Vdc input range
Output voltage setting value	23.82	24.00	24.18	Vdc	540 Vdc input, full- load output, Ta=25 ℃
Output voltage adjustment range	-20		+10	%Vo	380～850 Vdc input
Line regulation			±0.2	%Vo	380～850 Vdc input, full- load output
Load regulation			±0.5	%Vo	540 Vdc input
Full- load efficiency	93.0	94		%	540 Vdc input, Tc=40 ℃, aluminum baseplate tightly bonded to heat- sink
Output current	0		83.33	A	

Output over- current protection	87.5	100	125	A	Constant- current prior to hiccup mode, auto- recovery
Output over- voltage protection	27.5	29	33.6	Vdc	Hiccup protection mode, auto- recovery
Output ripple & noise		200		mVp- p	Refer to Figure 15 for test method
Recommended external output capacitor	2400	4800		μF	Parallel solid- state and low- ESR electrolytic capacitors (- 55 ℃), rated ≥63 V
Permissive capacitive load		90000		μF	Tested with resistive load; tantalum / solid- state / low- ESR electrolytic capacitor, rated ≥63 V
Input power- on delay		450	600	ms	Time from input power- on to Vout reaching 10% nominal
ON/OFF enable delay		100	200	ms	Time from ON/OFF assertion to Vout reaching 10% nominal
Output voltage rise time		50		ms	10% → 90% of nominal output voltage
Output overshoot at power- on / power- off			±5	%Vo	
Output overshoot for remote ON/OFF			±5	%Vo	
Transient Response — Overshoot			±5	%Vo	di/dt=2.5 A/μs; load steps: 25%- 50%- 25%, 50%- 75%- 50%
Transient Response — Recovery time			800	μs	
Other Characteristics					
Over- temperature shutdown threshold	105		125	℃	Measured at bottom- center of aluminum baseplate; auto- recovery
Over- temperature recovery threshold	100		115	℃	
OTP hysteresis	5			℃	
Temperature coefficient			±0.02	%/℃	
Switching frequency		180		kHz	
Current sharing accuracy	-8		+8	%	540Vdc input, 50%- 100% load range

AUX auxiliary output voltage	12	14	16	Vdc	0～20 mA output capability
Unit weight		265		g	Single module weight

Safety Characteristics

Dielectric Strength	Min	Typ	Max	Unit	Remarks
Input to Output	4250	4250	4250	Vdc	Basic insulation; no breakdown or flash- over. Test condition:3.5 mA/min, rising slope 500 V/s
Input to Case	2250	2250	2250	Vdc	
Output to Case	750	750	750	Vdc	

Insulation Resistance	Min	Typ	Max	Unit	Remarks
Input to Output	≥100			MΩ	Test voltage 500 Vdc
Input to Case	≥100			MΩ	
Output to Case	≥100			MΩ	

Gerneral Specifications		
MTBF	2×10^6 Hrs	Telcordia Tc = 25℃, 540Vdc input, full-load output, aluminum substrate with surface-mounted heat sink for conduction cooling
Case Temperature	-40~+100℃	
Storage Temperature	-55~+125℃	
Relative Humidity	5%-95%	No condensation
Pin Solder Temperature	260℃	Wave soldering, with a time less than 10 seconds;
Atmospheric pressure	54kPa(min),106kPa(max)	
Altitude	5000M	
Weight	265g（Typ）	

**Unless specified, otherwise all other parameters are tested under the following conditions: nominal input voltage, pure resistive load, 25℃ room temperature environment.

Typical Application Circuit

To guarantee proper operation and EMI performance, apply the basic circuit shown for DC input.When fed from 3 phase rectifier: rectifier side capacitance recommendation: 1μF per 1 W; for 2000W system use 2000μF.When front end uses 3 phase PFC module: 1μF per 3W; for 2000W use 660μF.For input drop- out / hold up application: insert a 1200V/15A diode at position F1 with heat sink mounting; it prevents capacitor discharging backwards and input short circuit.For

heavy capacitive loads (>50000 ~ 350000μF; pulse application up to 0.35 F) or motor- load application, add ORING circuit between CE6 and CE7. Recommended part: SCT53600 from Sinpower; use multiple parallel MOSFETs with proper heat sinking.

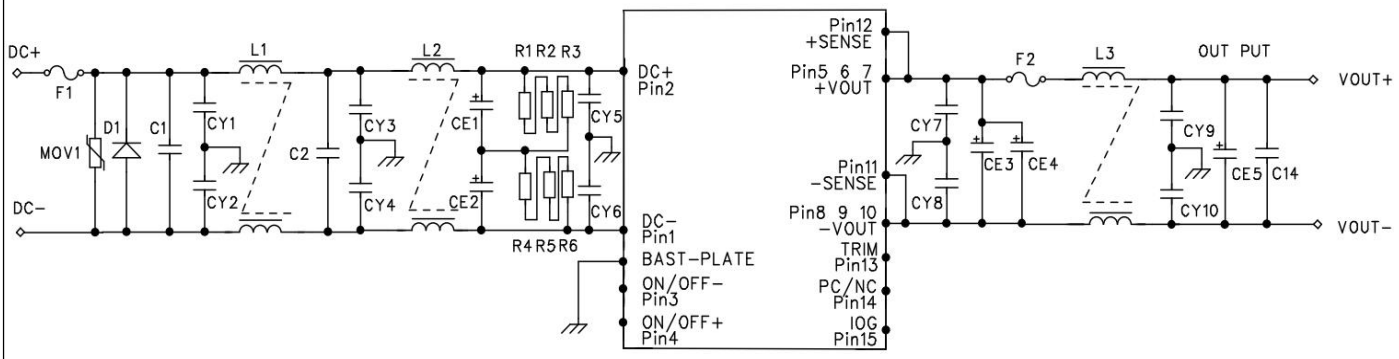

Recommended BOM for External Components

Symbol	Component Description	Remarks
F1	AC250V 10 A fuse	
D1	900 V 30 A, TO- 220AC or D2PAK package	
C1,C2	1 kVdc 1 μF metal- film capacitor	
CY3,CY4	1000 pF 250 VAC Y2 capacitor	
CE1,CE2	Two 550 Vdc 470 μF electrolytic capacitors connected in series (- 55 ℃), paralleled with 5 μF/1 kV metal- film cap	Low- ESR, wide- temperature capability
L1,L2	1 mH common- mode inductor, rated current ≥10 A	May omit if strict EMC is not required
R1～R6	510 kΩ, 1206 SMD	
MOV1	900 V, φ20 metal- oxide varistor	Input surge suppression
CY5～CY10	1000 pF 250 VAC Y2 capacitor	Value subject to actual EMC tuning
CE3,CE4	35 Vdc 220 μF solid- state capacitor	Solid- state + electrolytic mixed solution keeps ripple below 200 mV
CE5,CE6,CE7	35 Vdc 470 μF low- ESR electrolytic capacitor	Solid- state + electrolytic mixed solution keeps ripple below 200 mV
C3	1206, 104 /100 V	
L3	10 μH common- mode inductor, rated ≥60 A	Can omit if ripple requirement is relaxed above 100 mV

Notice: Capacitor selection shall be finalized according to actual EMC test results.
D1 & F1 realize input reverse- connection protection; F1 blows upon reverse input. MOV1 suppresses input surge. L1/L2 / CYxx serve EMC filtering. R1-R6 are voltage- balancing resistors 1206-510 kΩ.
AUX auxiliary output specifications: 12V～16Vdc, max 20mA.

Remote ON/OFF Function

Logic table for ON/OFF control pin:

ON/OFF Pin Level	Module Status	Sink Current Limit
Floating	Turn- on	≤ ±2 mA
Low level - 0.7～0.8 V	Turn- on	≤ ±2 mA
High level 3.5～18 V	Turn- off	≤ ±2 mA

Several recommended drive circuits: switch- control, transistor drive, TTL/CMOS logic drive.
The ON/OFF control inside module is galvanically isolated.

Switch control

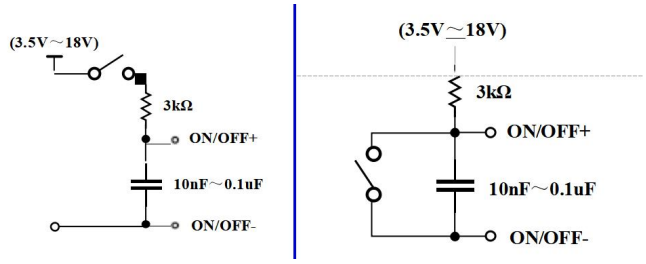

transistor drive

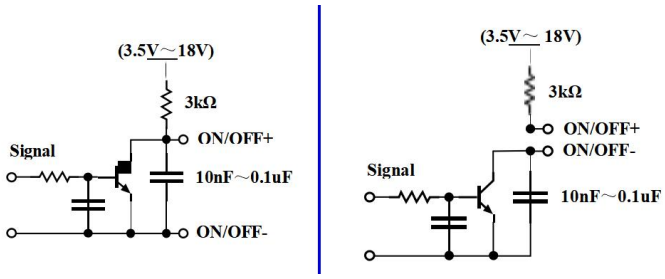

TTL/CMOS logic

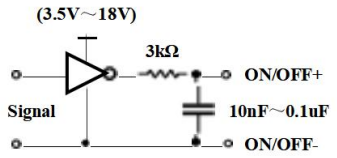

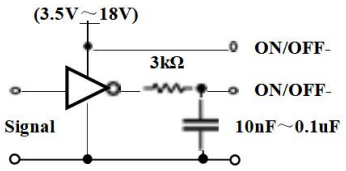

The internal reference circuit of the remote control module is for isolation control

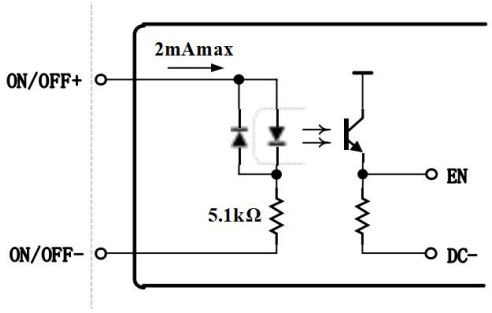

Input reflection ripple current

When the input voltage is at the nominal value, the load is adjusted to full load. The measurement method is as shown in the following figure.

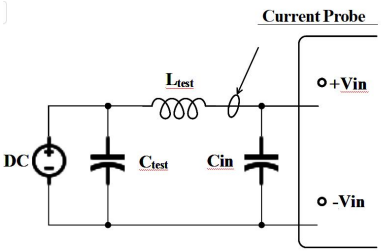

Note: The oscilloscope uses a bandwidth of 20 MHz;

Ltest: 6 μH @ 100 kHz;

Ctest: 1000 μF / 1KV, ESR < 0.1Ω @ 20℃ / 100 kHz. It is recommended to use electrolytic capacitors with good high-frequency characteristics;

Cin: 330 μF / 1KV, ESR < 0.1Ω @ 20℃ / 100 kHz;

Output voltage ripple and noise

When the input voltage is at the nominal value, the load is adjusted to full load, and then the input voltage varies within the entire range. The measurement method is as shown in the following figure.

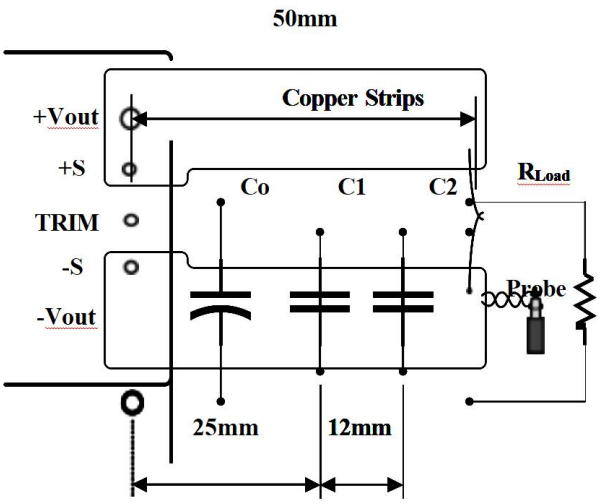

Note: The oscilloscope uses a 20 MHz bandwidth

C1: 1 μF ceramic capacitor

C2: 10 μF tantalum capacitor

Co: It is recommended to solder the capacitor close to the output pin of the module. It is advisable to use solid-state capacitors in parallel with low ESR electrolytic capacitors to better reduce the output voltage ripple and improve the output performance in low-temperature environments.

TRIM PIN

As shown in the following three diagrams, adding resistors between the TRIM terminal and the ±SENSE terminal respectively can increase or decrease the output voltage within the range of 80% to 110% of Vout. When a resistor is added between the TRIM terminal and the +SENSE terminal, the output voltage increases; when a resistor is added between the TRIM terminal and the -SENSE terminal, the output voltage decreases. During the adjustment process, the resistor should be adjusted as close as possible to the pins of the module power supply. When this function is not needed, the TRIM terminal should be left open.

Schematic diagram of the TRIM resistor connection method for increasing the output voltage

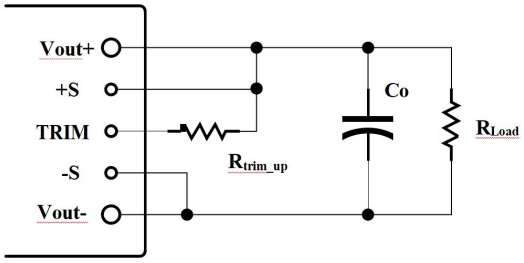

Formula for calculating the TRIM resistor for increasing the output voltage:

$$R_{Trim_up} = \frac{5.1 \times V_{nom} \times (100 + \Delta)}{2.5 \times \Delta} - \frac{510}{\Delta} - 10.2\ (\mathrm{k\Omega})$$

Example: 10% upward adjustment, i.e. Δ=10. Substitute Δ. substitute=10 10 into the formula for the upward TRIM tRIM resistore:

$$R_{Trim_up} = \frac{5.1 \times 28 \times (100 + 10)}{2.5 \times 10} - \frac{510}{10} - 10.2 = 567.1\ (\mathrm{k\Omega})$$

Schematic diagram of the TRIM resistor connection method for output voltage reduction:

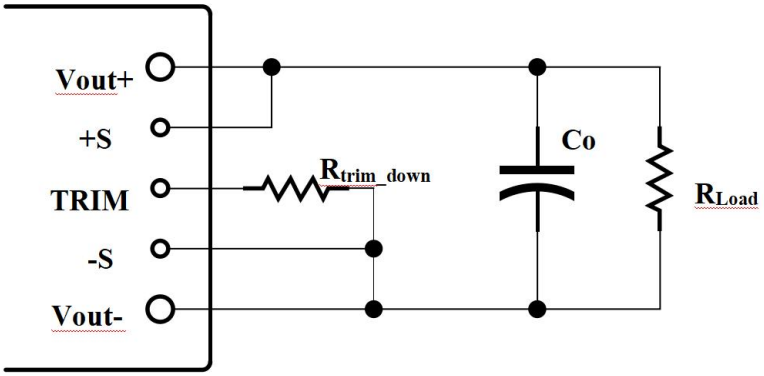

Formula for calculating the TRIM resistor for output voltage reduction:

$$R_{Trim_down} = \frac{510}{\Delta} - 10.2\ (\mathrm{k\Omega})$$

Example: 10% downward adjustment, i.e. Δ=10. Substitute Δ=10 into the formula for the downward TRIM resistor:

$$R_{Trim_down} = \frac{510}{10} - 10.2 = 40.8\ (\mathrm{k\Omega})$$

Up and down TRIM resistor vs output voltage curve

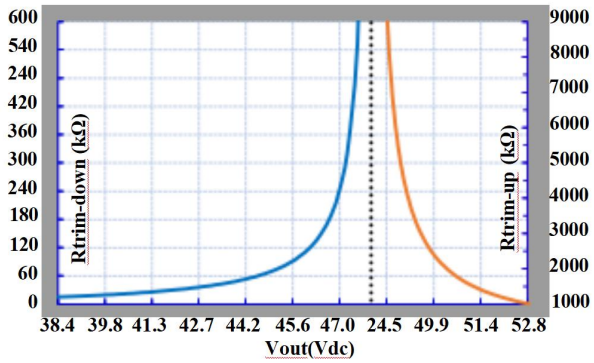

Note:

$$\Delta = \left| \frac{V_{out} - V_{nom}}{V_{nom}} \right| \times 100$$

V_{nom}: Nominal output voltage

V_{out}: Trimmed output voltage

Raising:

1. To ensure that the module does not exceed the maximum rated power, when the output voltage increases, the maximum output current decreases at the same rate.

2. The fine-tuning resistor must be connected between TRIM and +SENSE. The capacitor should not directly cross the TRIM pin.

3. The output voltage cannot be fine-tuned above the maximum fine-tuning range (110%) as doing so may cause the output overvoltage protection to activate.

Lowering:

1. The module does not output constant power. Therefore, when the output voltage decreases, the output power should also decrease at the same rate. The output load current must not exceed the maximum rated current.

2. The fine-tuning resistor must be connected between TRIM and -SENSE. The capacitor should not directly cross the TRIM pin.

Heat dissipation method

To ensure the module operates normally, a heat sink should be added to the outer casing during use, and forced air cooling should be adopted to keep the temperature of the casing within the normal operating range. Conductive silicone grease should be applied between the heat sink and the casing to facilitate heat dissipation. Otherwise, after the module

has been operating for a period of time, the over-temperature protection circuit will activate, and the power supply will stop outputting. The heat sink can be an independent heat sheet or a system heat base plate.

Heat sink installation diagram

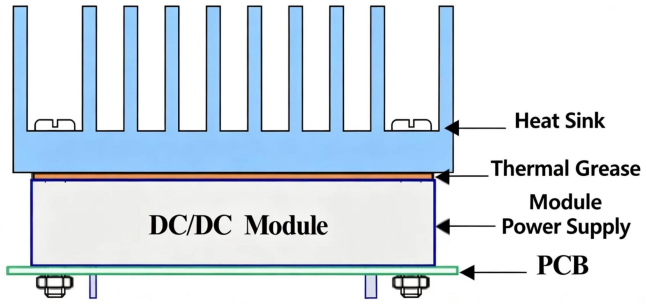

Over-temperature protection point test schematic diagram

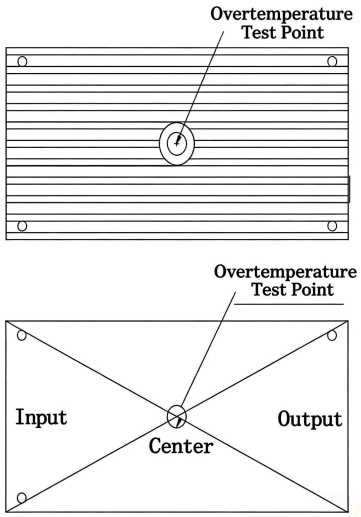

Output Over- current & Short- circuit Protection

Upon overload, module enters constant- current mode; when Vout drops to ~50 %Vo, it enters hiccup restart mode. Short- circuit triggers hiccup protection directly. Output auto- recovers after fault removal.

Do NOT sustain long- time constant- current operation, it may cause over- heating and permanent damage.

Output Over- voltage Protection

When output voltage reaches 115- 140 % of nominal Vo, hiccup- mode OVP activates. Auto- recovery after fault is cleared.

Output Voltage Remote Compensation

This module has the function of output voltage remote compensation, which can automatically compensate for the voltage drop on the output lead. As shown in Figure (21): Connect the ±SENSE terminals through twisted-pair cables to

both ends of the load. The voltage at these two connection points is the rated output voltage. When this function is not needed, short-circuit the +SENSE terminal to the output terminal +Vout, and short-circuit the -SENSE terminal to the output terminal -Vout.

Output voltage remote compensation circuit

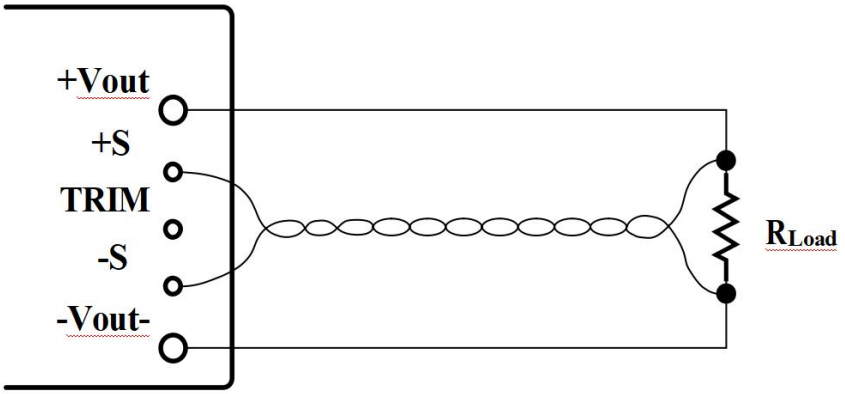

Auxiliary Power Supply

This module has an auxiliary power output terminal, which can supply power to external application circuits. The output voltage/current capacity is 12-16Vdc/20mA.

Parallel startup clock synchronization for PC/NC

When multiple modules are used in parallel, in order to enable all modules to start up simultaneously, the clock synchronization terminals of each module need to be connected together. Otherwise, if the output voltages of some modules are established earlier than those of other modules, it may cause the module with the earlier established output voltage to enter the overcurrent protection state, and all modules cannot enter the balanced current state normally.

Parallel operation

Connect the IOG terminals of each power module operating in parallel. This enables the uniform distribution of output current among the modules. There is a limit to the maximum load current based on the number of power units operating in parallel. Please use within the limit range. The maximum load current should not exceed 90% of the rated output current. If you exceed the limit range, it will cause abnormal heating and damage. Please be very cautious. When operating in parallel, set the output voltage accuracy within ±1%.

Parallel operation conditions:

Quantity of Parallel Modules	Maximum Allowable Total Output Current (relative to single- unit rated current)
2～3	95 %
4～6	95 %
7～10	90 %
11～15	85 %

Diagram of Parallel Connection of Equal Current Generators

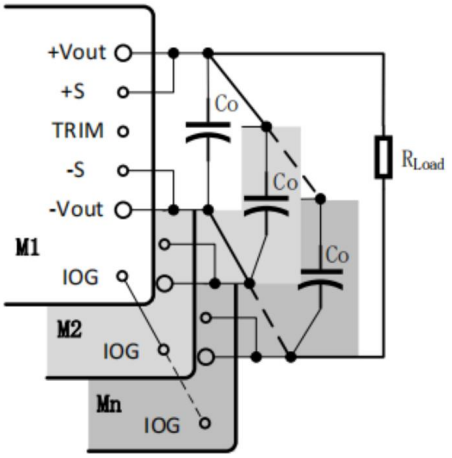

When in a more appropriate situation, for capacitive loads of 5-350,000 uF or more, for pulse applications, a capacitive 0.35F capacitor can be used. Between CE6 and CE7, with the load being the power supply for the motor, an ORING circuit should be added. It is recommended to use the chip from domestic company Sichuan ZhiZhou Technology, model SCT53600. The isolation MOSFET is selected based on the current size. The MOSFET should be connected in parallel with two or more units. During the application, the MOSFET should be cooled by the heat sink.

Dimensions and Recommended Layout

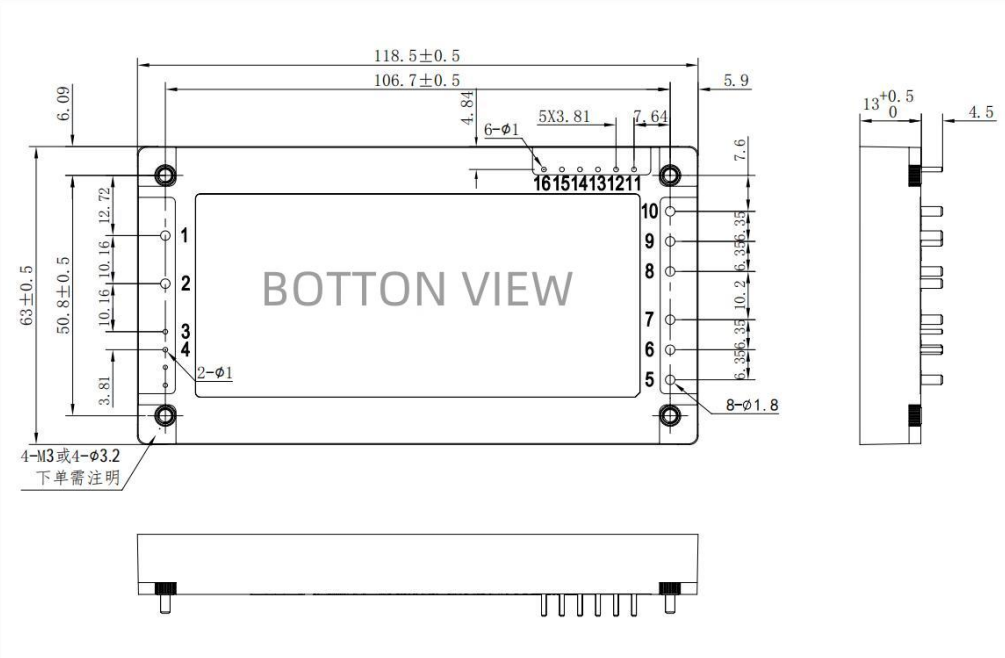

Pin	Function	Pin	Function
1	-Vin	9	-Vo
2	+Vin	10	-Vo
3	ON/OFF	11	-S
4	ON/OFF	12	+S
5	+Vo	13	TRIM
6	+Vo	14	PC/NC

7	+Vo	15	IOG
8	-Vo	16	AUX

Noted

User Guidelines

Read all warnings and notes before use. Improper operation may result in electric shock,equipment damage or fire hazard.

Warnings

●Keep hands and face away from powered on module to prevent personal injury.

●Do NOT disassemble or modify the module; disassembly void warranty and may cause electric shock hazard.

●Internal components carry high voltage and high temperature risk.Never touch internal parts.

Notes

●Complete all wiring with input power fully disconnected. Double check input, output and signal pin connections before power up.

●Maximum non operating input voltage must not exceed 950 Vdc; exceeding will permanently destroy module.

●Input source must provide reinforced insulation isolation.

●Install slow blow 10 A fuse or equivalent over- current protection at input side.

●Schematic and component values are for reference only. Validate circuit effectiveness in your system design.

●Operate strictly within published specification limits; out of range operation will damage the unit.

●End equipment designer must ensure exposed power terminals cannot be accidentally touched by operators or tools, adding mechanical protection as required.